E-SHINE DISPLAY CO., LTD. EC1601A

Dimension Drawing

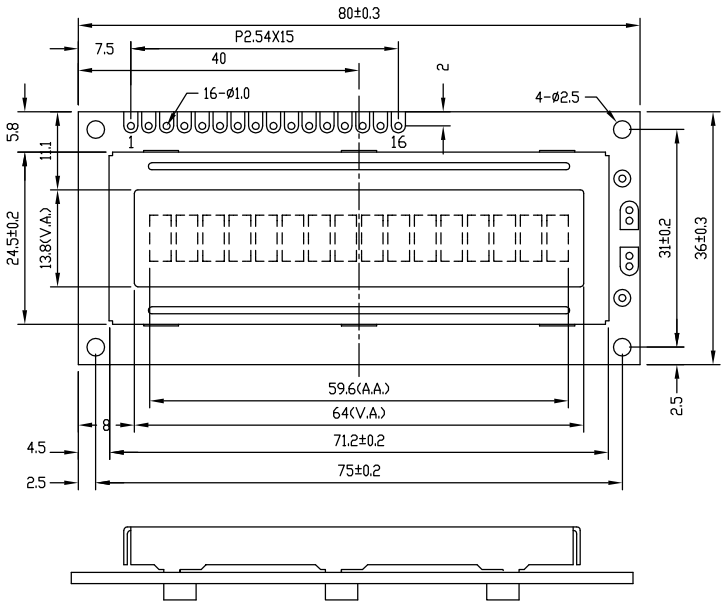

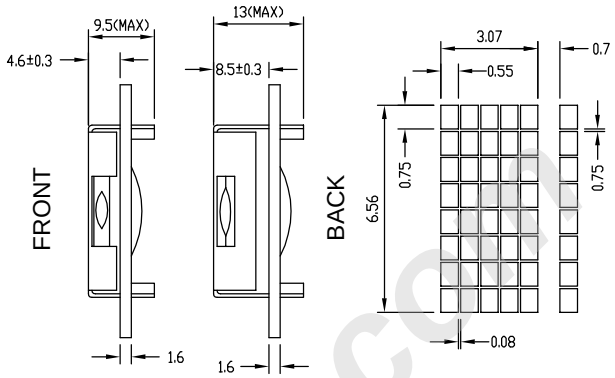

Without B/L or EL B/L

With LED B/L

DOTS DETAIL

TOLERANCES UNLESS OTHERWISE STATED
X.X ±0.20 X.XX ±0.10 UNIT: mm

Feature:

1. 1-line x16 characters display; 5x8 dots with cursor
2. Built-in controller(ST7066U or equivalent)
3. +5V power supply(also available for +3.3V)
4. 1/16 Duty cycle
5. BTN, HTN, STN or FSTN Mode
6. Match all kind colors of LED back light
7. ROHS compliant

Interface Pin Connections

PIN NO.	Symbol	Function
1	VSS	GND
2	VDD	+5V or +3.3V
3	V0	Contrast adjustment
4	RS	H/L Register select signal
5	R/W	H/L Read/Write signal
6	E	H/L Enable signal
7	DB0	H/L Data bus line
8	DB1	H/L Data bus line
9	DB2	H/L Data bus line
10	DB3	H/L Data bus line
11	DB4	H/L Data bus line
12	DB5	H/L Data bus line
13	DB6	H/L Data bus line
14	DB7	H/L Data bus line
15	A	Power supply for B/L(LED+)
16	K	Power supply for B/L(LED-)

Mechanical Data

Item	Standard	Unit
Module dimension	80.0 x 36.0	mm
Viewing area	64.0 x 13.8	mm
Mounting hole	75.0 x 31.0	mm
Character size	3.07 x 6.56	mm

Absolute Maximum Rating

Item	Symbol	Standard			Unit
		Min	Typ	Max	
Power supply	VDD-VSS	-0.3	---	7.0	V
Input voltage	VI	-0.3	---	VDD	

Electronical Characteristics

Item	Symbol	Condition		Standard			Unit
				Min	Typ	Max	
Input voltage	VDD	+5.0V		4.5	5.0	5.5	V
		+3.3V		2.7	3.3	4.5	V
Supply current	I_{DD}	VDD=5V		----	0.2	0.5	mA
Recommended LCD driving voltage for normal temp version module	VDD-V0 (VDD=5V)	-20°C		4.9	5.2	5.5	V
		0°C		4.5	4.8	5.1	
		25°C		4.1	4.5	4.8	
		50°C		3.8	5.0	4.4	
		70°C		3.5	4.2	5.5	
LED forward voltage	VF	25°C		----	4.2	4.6	V
LED forward current	IF	25°C	Array	----	110	----	mA
			Edge	----	15	20	
EL power supply	I_{EL}	V_{EL}=110V AC 400Hz		----	----	5.0	mA

Display Character Address Code:

Display position	1	2	3	4	5	6	7	8	9	10	11	12	13	14	15	16
DDRAM address	00	01	02	--	--	--	--	--	--	--	--	--	--	--	--	0FH

www.e-shinedisplay.com